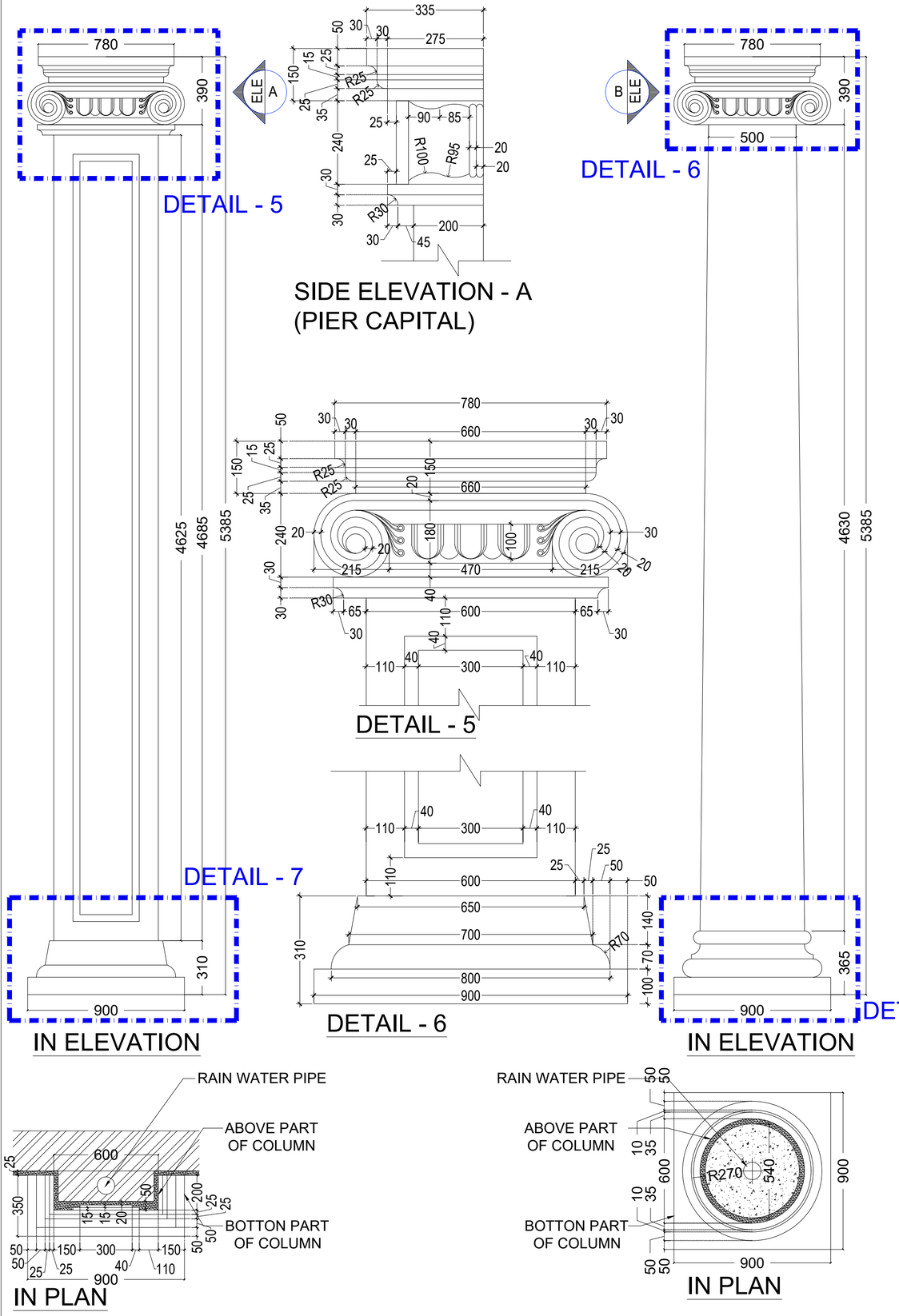

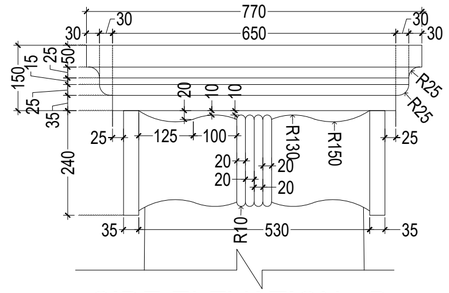

VIEW OF CIRCULAR CAPITAL

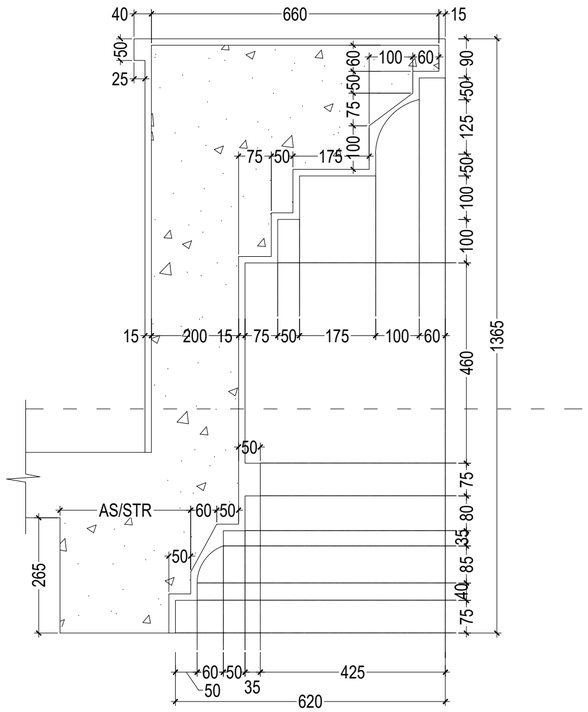

DETAIL - 1

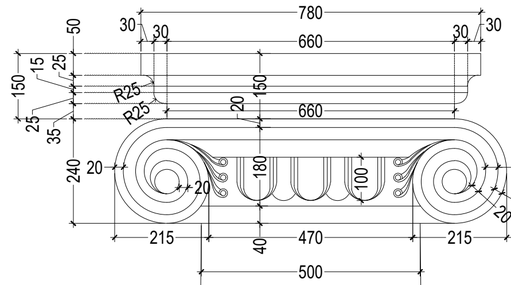

DETAIL - 7

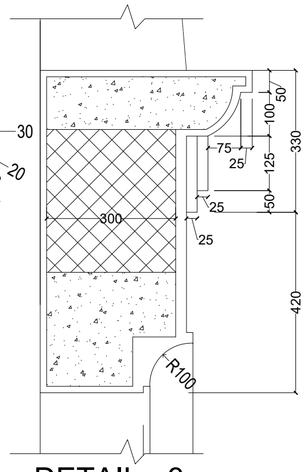

DETAIL - 3

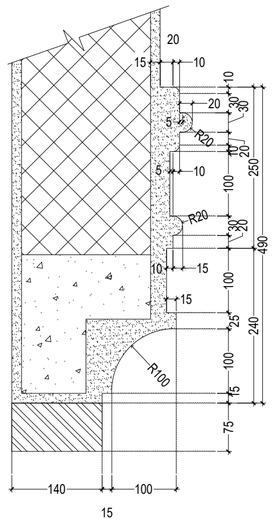

DETAIL - 2

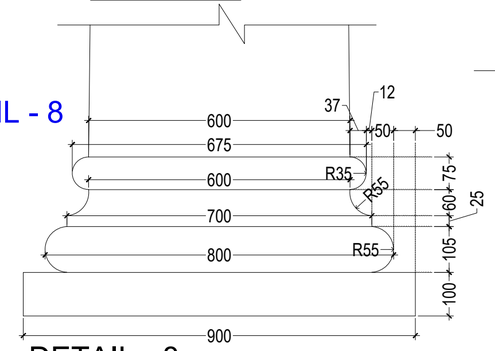

DETAIL - 8

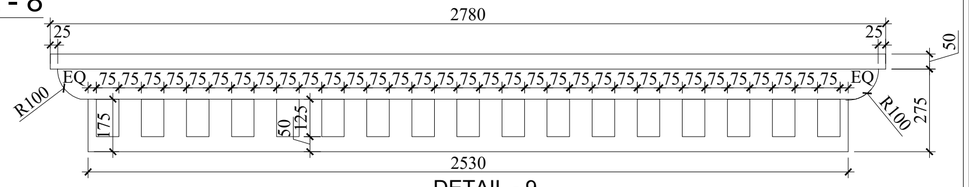

DETAIL - 9

NOTES:
1. THIS DRAWING IS NOT TO BE SCALED. ONLY WRITTEN DIMENSIONS ARE TO BE FOLLOWED.
2. ALL DIMENSION SHALL BE CHECKED AT SITE BEFORE COMMENCEMENT OF WORK.
3. ANY DISCREPANCY MUST BE BROUGHT IN THE NOTICE OF ARCHITECT IMMEDIATELY.
4. THIS DWG. SHALL BE READ IN CONJUNCTION WITH STRUCTURE AND OTHER SERVICES DWG.

NO.	DATE	BY	REMARK
R1	----------	----------	----------
R0	23.09.19	RAJEEV	GOOD FOR CONSTRUCTION

REVISION

OMAXE ARCH. PLANNING DEPT.
ADVANCE COPY | TENDER COPY | GOOD FOR CONSTRUCTION
DATE | SIGN

APPROVED BY

DEPARTMENT	SEAL
ARCHITECTURE	
ARCHITECTURE	
STRUCTURE	
STRUCTURE	
ELECTRICAL	
ELECTRICAL	
LANDSCAPE	

DATE----------

OMAXE
TURNING DREAMS INTO REALITY

PROJECT TITLE:
AANANDA, ALLAHABAD

DRAWING TITLE
PORCH DETAILS-2BHK

SCALE: NTS

DRAWING NO:
AANANDA/PORCH-2bhk/AR/03